**Light efficiency:**

**3 Lumen/Watt**

**Light quality:**

**CRI: 0.0**

**Color temperature:**

**0 K**

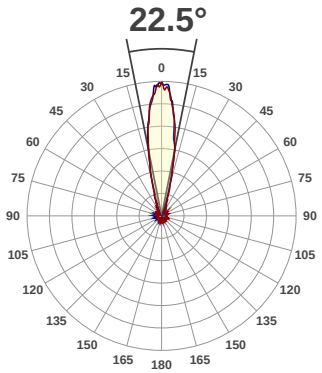

**Product name:**

## Ultra Hex Bar 12

**Test:**

## w Blinder UV

**Date:**

## 5/31/2017

**Output: 50.7 lm  Power consumption: 19.3 W  Peak: 81.4 cd**

**Spectral distribution**

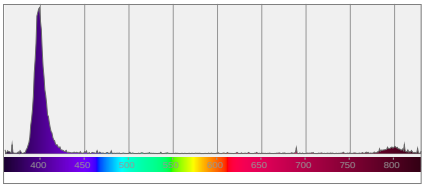


**Color coordinates**

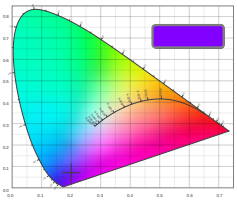

**Zoom color point**

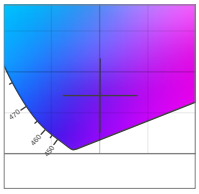

**CRI R values**

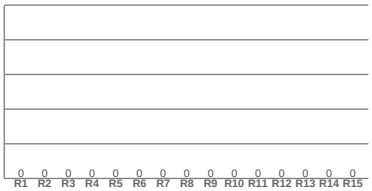


| Color temperature | Color rendering index | Red component | Color fidelity | Color gamut | Color quality scale | Color coordinate cie 1931 | Color coordinate cie 1931 | Color coordinate | Color coordinate | Color diviation from black body |
|---|---|---|---|---|---|---|---|---|---|---|
| CCT | CRI | CRI R9 | TM30 Rf | TM30 Rg | CQS | x | y | u | v | Δuv |
| 0 K | 0.0 | 0.0 | 0.0 | 0.0 | 0.0 | 0.201 | 0.071 | 0.233 | 0.123 | n/a |

## Beam details

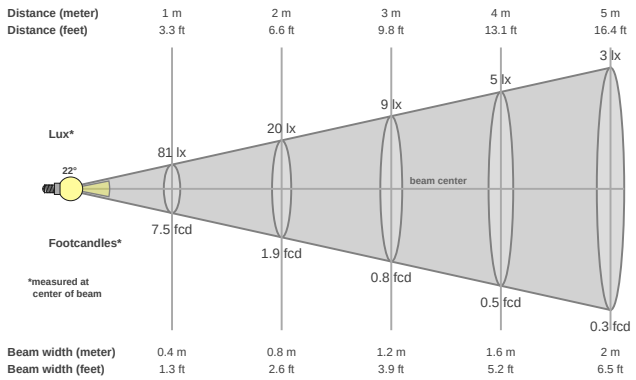


### Beam angels

| Beam angle 50% | Field angle 10% | Cutoff angle 2,5% |
|---|---|---|
| 22.5° | 42.5° | 360° |

### Beam intensities

| Peak intensity | Int. ratio in 120° cone | Int. ratio in 90° cone |
|---|---|---|
| 81.4 cd | 0.4% | 0.3% |

### Power

| Power | Power factor | Power frequency |
|---|---|---|
| 19.3 W | 0.51 | 60.1 Hz |

| Nominal voltage | Voltage | Current |
|---|---|---|
| 230 V | 116 V | 0.325 A |

### Beam intensities from 1-20m

| 1m | 2m | 3m | 4m | 5m | 6m | 7m | 8m | 9m | 10m | 11m | 12m | 13m | 14m | 15m | 16m | 17m | 18m | 19m | 20m |
|---|---|---|---|---|---|---|---|---|---|---|---|---|---|---|---|---|---|---|---|
| 3.3ft | 6.6ft | 9.8ft | 13.1ft | 16.4ft | 19.7ft | 23ft | 26.2ft | 29.5ft | 32.8ft | 36.1ft | 39.4ft | 42.7ft | 45.9ft | 49.2ft | 52.5ft | 55.8ft | 59.1ft | 62.3ft | 65.6ft |
| 81lx | 20lx | 9lx | 5lx | 3lx | 2lx | 2lx | 1lx | 1lx | 1lx | 1lx | 1lx | 0lx | 0lx | 0lx | 0lx | 0lx | 0lx | 0lx | 0lx |
| 7.5fcd | 1.9fcd | 0.8fcd | 0.5fcd | 0.3fcd | 0.2fcd | 0.2fcd | 0.1fcd | 0.1fcd | 0.1fcd | 0.1fcd | 0.1fcd | 0fcd | 0fcd | 0fcd | 0fcd | 0fcd | 0fcd | 0fcd | 0fcd |