Light efficiency:

18 Lumen/Watt

Light quality:

CRI: 0.0

Color temperature:

0 K

121.2°

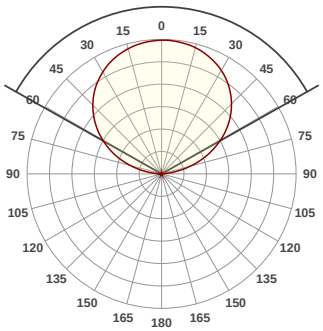

Product name:
3D Vision Plus

Test:
Green

Date:
11/22/2017

Output: 79.5 lm **Power consumption: 4.5 W** **Peak: 25.2 cd**

Spectral distribution

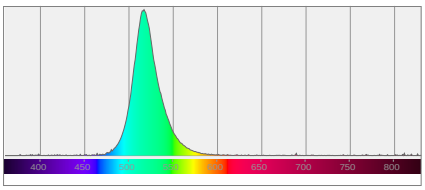

Color coordinates

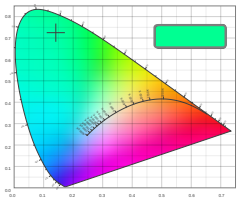

Zoom color point

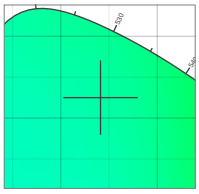

CRI R values

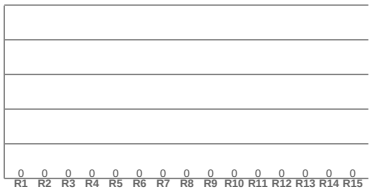

Color temperature	Color rendering index	Red component	Color fidelity	Color gamut	Color quality scale	Color coordinate cie 1931	Color coordinate cie 1931	Color coordinate	Color coordinate	Color diviation from black body
CCT	CRI	CRI R9	TM30 Rf	TM30 Rg	CQS	x	y	u	v	Δuv
0 K	0.0	0.0	0.0	0.0	0.0	0.141	0.725	0.049	0.381	n/a

Beam details

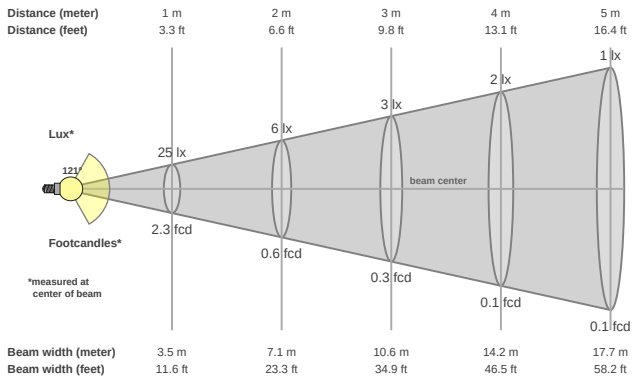

Beam angels

Beam angle 50%	Field angle 10%	Cutoff angle 2,5%
121.2°	164.2°	174.4°

Beam intensities

Peak intensity	Int. ratio in 120° cone	Int. ratio in 90° cone
25.2 cd	76.7%	51.0%

Power

Power	Power factor	Power frequency
4.5 W	0.49	60 Hz

Nominal voltage	Voltage	Current
230 V	115 V	0.080 A

Beam intensities from 1-20m

1m	2m	3m	4m	5m	6m	7m	8m	9m	10m	11m	12m	13m	14m	15m	16m	17m	18m	19m	20m
3.3ft	6.6ft	9.8ft	13.1ft	16.4ft	19.7ft	23ft	26.2ft	29.5ft	32.8ft	36.1ft	39.4ft	42.7ft	45.9ft	49.2ft	52.5ft	55.8ft	59.1ft	62.3ft	65.6ft
25lx	6lx	3lx	2lx	1lx	1lx	1lx	0lx	0lx	0lx	0lx	0lx	0lx	0lx	0lx	0lx	0lx	0lx	0lx	0lx
2.3fcd	0.6fcd	0.3fcd	0.1fcd	0.1fcd	0.1fcd	0fcd	0fcd	0fcd	0fcd	0fcd	0fcd	0fcd	0fcd	0fcd	0fcd	0fcd	0fcd	0fcd	0fcd